Here is the Network Topology I built:

End Hosts = 10

Routers = 2

Switches = 2

Multilayer Switch = 1

VLANs = 4

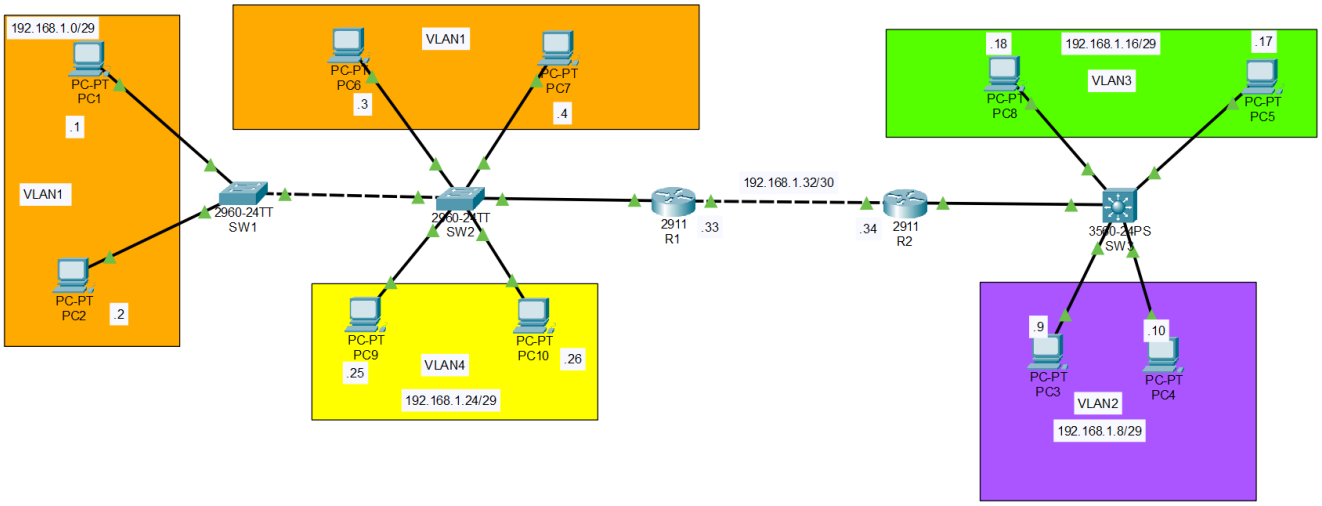

1. Subnetting:
   Variable-length subnet masks (VLSM) are used.
   VLAN10 = 4 end hosts
   2^3 – 2 = 6 possible hosts, 3 host bits.
   192.168.1.0/24 -> 192.168.1.0/29
   Subnet mask = 255.255.255.248
   Address range = 192.168.1.0 – 192.168.1.7
   First Usable address = 192.168.1.1
   Last Usable address = 192.168.1.6

   VLAN20 = 2 end hosts
   2^2 – 2 = 2 possible hosts, but what about the default gateway?
   Therefore, 2^3 – 2, 3 host bits again.
   Subnet mask = 255.255.255.248
   Address range = 192.168.1.8 – 192.168.1.15
   First Usable = 192.168.1.9
   Last usable = 192.168.1.14

   VLAN30 = 2 end hosts
   Subnet mask = 255.255.255.248

Address range = 192.168.1.16 – 192.168.1.23
First Usable = 192.168.1.17
Last Usable = 192.168.1.22

VLAN40 = 2end hosts
Subnet mask = 255.255.255.248
Address range = 192.168.1.24 – 192.168.1.31
First Usable = 192.168.1.25
Last Usable = 192.168.1.30

Connection between routers:
Point to point = 2 host bits
/30 prefix length
Subnet mask = 255.255.255.252
Address range = 192.168.1.32 – 192.168.1.35
R1 = 192.168.1.33
R2 = 192.168.1.34

2. Access port Configurations :

SW1

```
SW1(config)#int range f0/1-2
SW1(config-if-range)#switchport mode access
SW1(config-if-range)#switchport access vlan 10
% Access VLAN does not exist. Creating vlan 10
SW1(config-if-range)#do sh vlan br

VLAN Name                             Status    Ports
---- -------------------------------- --------- -------------------------------
1    default                          active    Fa0/3, Fa0/4, Fa0/5, Fa0/6
                                                Fa0/7, Fa0/8, Fa0/9, Fa0/10
                                                Fa0/11, Fa0/12, Fa0/13, Fa0/14
                                                Fa0/15, Fa0/16, Fa0/17, Fa0/18
                                                Fa0/19, Fa0/20, Fa0/21, Fa0/22
                                                Fa0/23, Fa0/24, Gig0/1, Gig0/2
10   VLAN0010                         active    Fa0/1, Fa0/2
1002 fddi-default                     active
1003 token-ring-default               active
1004 fddinet-default                  active
1005 trnet-default                    active
SW1(config-if-range)#
```

SW2

```
Switch>en
Switch#conf t
Enter configuration commands, one per line.  End with CNTL/Z.
Switch(config)#hostname SW2
SW2(config)#int range f0/1-2
SW2(config-if-range)#switchport mode access
SW2(config-if-range)#switchport access vlan 10
% Access VLAN does not exist. Creating vlan 10
SW2(config-if-range)#int range f0/4-5
SW2(config-if-range)#switchport mode access
SW2(config-if-range)#switchport access vlan 40
% Access VLAN does not exist. Creating vlan 40
SW2(config-if-range)#do sh vlan br

VLAN Name                             Status    Ports
---- -------------------------------- --------- -------------------------------
1    default                          active    Fa0/3, Fa0/6, Fa0/7, Fa0/8
                                                Fa0/9, Fa0/10, Fa0/11, Fa0/12
                                                Fa0/13, Fa0/14, Fa0/15, Fa0/16
                                                Fa0/17, Fa0/18, Fa0/19, Fa0/20
                                                Fa0/21, Fa0/22, Fa0/23, Fa0/24
                                                Gig0/1, Gig0/2
10   VLAN0010                         active    Fa0/1, Fa0/2
40   VLAN0040                         active    Fa0/4, Fa0/5
1002 fddi-default                     active
1003 token-ring-default               active
1004 fddinet-default                  active
1005 trnet-default                    active
SW2(config-if-range)#
```

SW3

```
Switch>en
Switch#conf t
Enter configuration commands, one per line.  End with CNTL/Z.
Switch(config)#hostname SW3
SW3(config)#int range f0/1-2
SW3(config-if-range)#switchport mode access
SW3(config-if-range)#switchport access vlan 20
% Access VLAN does not exist. Creating vlan 20
SW3(config-if-range)#int range f0/3-4
SW3(config-if-range)#switchport access vlan 30
% Access VLAN does not exist. Creating vlan 30
SW3(config-if-range)#do sh vlan br

VLAN Name                             Status    Ports
---- -------------------------------- --------- -------------------------------
1    default                          active    Fa0/5, Fa0/6, Fa0/7, Fa0/8
                                                Fa0/9, Fa0/10, Fa0/11, Fa0/12
                                                Fa0/13, Fa0/14, Fa0/15, Fa0/16
                                                Fa0/17, Fa0/18, Fa0/19, Fa0/20
                                                Fa0/21, Fa0/22, Fa0/23, Fa0/24
                                                Gig0/1, Gig0/2
20   VLAN0020                         active    Fa0/1, Fa0/2
30   VLAN0030                         active    Fa0/3, Fa0/4
1002 fddi-default                     active
1003 token-ring-default               active
1004 fddinet-default                  active
1005 trnet-default                    active
SW3(config-if-range)#
```

3. Configuring native VLAN for VLAN 10 (using the untagged technique)

```
SW1(config-if)#switchport trunk native vlan 10
```

```
SW2(config)#int f0/3
SW2(config-if)#switchport trunk native vlan 10
```

```
SW3(config)#int g0/1
SW3(config-if)#switchport mode trunk
Command rejected: An interface whose trunk encapsulation is "Auto" can not be
configured to "trunk" mode.
SW3(config-if)#switchport trunk encapsulation dot1q
SW3(config-if)#switchport mode trunk

SW3(config-if)#
%LINEPROTO-5-UPDOWN: Line protocol on Interface GigabitEthernet0/1, changed state to
down

%LINEPROTO-5-UPDOWN: Line protocol on Interface GigabitEthernet0/1, changed state to
up

SW3(config-if)#switchport trunk native vlan 10
SW3(config-if)#
```

4. Tagged traffic trunk link

```
SW1(config-if)#int f0/3
SW1(config-if)#switchport trunk allowed vlan 20,30,40
SW1(config-if)#do sh int trunk
Port        Mode         Encapsulation  Status        Native vlan
Fa0/3       on           802.1q         trunking      10

Port        Vlans allowed on trunk
Fa0/3       20,30,40

Port        Vlans allowed and active in management domain
Fa0/3       none

Port        Vlans in spanning tree forwarding state and not pruned
Fa0/3       none
```

```
SW2(config-if)#int f0/3
SW2(config-if)#switchport trunk allowed vlan 20,30,40
SW2(config-if)#do sh int trunk
Port        Mode         Encapsulation  Status        Native vlan
Fa0/3       on           802.1q         trunking      10

Port        Vlans allowed on trunk
Fa0/3       20,30,40

Port        Vlans allowed and active in management domain
Fa0/3       40

Port        Vlans in spanning tree forwarding state and not pruned
Fa0/3       40

SW2(config-if)#
```

Note: Why is VLAN 10 not mentioned in the management domain despite being directly connected? – Cause it is the native VLAN (untagged)

5. R1 Configuration:

```
R1(config)#int g0/0
R1(config-if)#int g0/0.10
R1(config-subif)#
%LINK-3-UPDOWN: Interface GigabitEthernet0/0.10, changed state to down

%LINEPROTO-5-UPDOWN: Line protocol on Interface GigabitEthernet0/0.10, changed state
to up

R1(config-subif)#encapsulation dot1q 10 native
R1(config-subif)#ip address 192.168.1.6 255.255.255.248
R1(config-subif)#int g0/0.20
R1(config-subif)#
%LINK-3-UPDOWN: Interface GigabitEthernet0/0.20, changed state to down

%LINEPROTO-5-UPDOWN: Line protocol on Interface GigabitEthernet0/0.20, changed state
to up

R1(config-subif)#encapsulation dot1q ?
  <1-4094>  IEEE 802.1Q VLAN ID
R1(config-subif)#encapsulation dot1q 40
R1(config-subif)#ip address 192.168.1.30 255.255.255.248
R1(config-subif)#
```

!!The lab is not working

Mistake – I didn't configure the VLANs that didn't exist on a switch as access ports, but they were required to be configured as trunk ports in the management domain so the switch could forward traffic. Same was necessary for the link between SW2 and R1.

6. Correct Switch Configurations:

```
SW1>en
SW1#conf t
Enter configuration commands, one per line.  End with CNTL/Z.
SW1(config)#do sh int trunk
Port        Mode         Encapsulation  Status        Native vlan
Fa0/3       on           802.1q         trunking      10

Port        Vlans allowed on trunk
Fa0/3       10,20,30,40

Port        Vlans allowed and active in management domain
Fa0/3       10,20,30,40

Port        Vlans in spanning tree forwarding state and not pruned
Fa0/3       10,20,30,40

SW1(config)#do sh vlan br

VLAN Name                             Status    Ports
---- -------------------------------- --------- -------------------------------
1    default                          active    Fa0/4, Fa0/5, Fa0/6, Fa0/7
                                                Fa0/8, Fa0/9, Fa0/10, Fa0/11
                                                Fa0/12, Fa0/13, Fa0/14, Fa0/15
                                                Fa0/16, Fa0/17, Fa0/18, Fa0/19
                                                Fa0/20, Fa0/21, Fa0/22, Fa0/23
                                                Fa0/24, Gig0/1, Gig0/2
10   VLAN0010                         active    Fa0/1, Fa0/2
20   VLAN0020                         active
30   VLAN0030                         active
40   VLAN0040                         active
1002 fddi-default                     active
1003 token-ring-default               active
1004 fddinet-default                  active
1005 trnet-default                    active
SW1(config)#
```

```
SW2(config)#do sh int trunk
Port        Mode         Encapsulation  Status        Native vlan
Fa0/3       on           802.1q         trunking      10
Gig0/1      on           802.1q         trunking      10

Port        Vlans allowed on trunk
Fa0/3       10,20,30,40
Gig0/1      10,20,30,40

Port        Vlans allowed and active in management domain
Fa0/3       10,20,30,40
Gig0/1      10,20,30,40

Port        Vlans in spanning tree forwarding state and not pruned
Fa0/3       10,20,30,40
Gig0/1      10,20,30,40

SW2(config)#do sh vlan br

VLAN Name                             Status    Ports
---- -------------------------------- --------- -------------------------------
1    default                          active    Fa0/6, Fa0/7, Fa0/8, Fa0/9
                                                Fa0/10, Fa0/11, Fa0/12, Fa0/13
                                                Fa0/14, Fa0/15, Fa0/16, Fa0/17
                                                Fa0/18, Fa0/19, Fa0/20, Fa0/21
                                                Fa0/22, Fa0/23, Fa0/24, Gig0/2
10   VLAN0010                         active    Fa0/1, Fa0/2
20   VLAN0020                         active
30   VLAN0030                         active
40   VLAN0040                         active    Fa0/4, Fa0/5
1002 fddi-default                     active
1003 token-ring-default               active
1004 fddinet-default                  active
1005 trnet-default                    active
SW2(config)#
```

And corrected one design issue on router R1. Though not a technical error, but configured int g0/0.40 for vlan 40.

```
R1(config)#do sh ip int br
Interface              IP-Address      OK? Method Status                Protocol
GigabitEthernet0/0     unassigned      YES unset  up                    up
GigabitEthernet0/0.10  192.168.1.6     YES manual up                    up
GigabitEthernet0/0.40  192.168.1.30    YES manual up                    up
GigabitEthernet0/1     unassigned      YES unset  down                  down
GigabitEthernet0/2     192.168.1.33    YES manual up                    up
Vlan1                  unassigned      YES unset  administratively down down
R1(config)#
```

7. Enabling Inter-VLAN routing on SW3 (Multilayer Switch):
   Subnet is required between R2 and SW3, as both of these will behave like Layer 3 devices.
   2 end hosts = 2^2 – 2 = 2 host bits
   /30 = 255.255.255.252 subnet mask
   192.168.1.36 = Network address
   192.168.1.39 = Broadcast address
   First usable = 192.168.1.37
   Last usable = 192.168.1.38

   SW3 configuration:

```
SW3(config)#ip routing
SW3(config)#int g0/1
SW3(config-if)#no switchport
SW3(config-if)#
%LINEPROTO-5-UPDOWN: Line protocol on Interface GigabitEthernet0/1, changed state to
down

%LINEPROTO-5-UPDOWN: Line protocol on Interface GigabitEthernet0/1, changed state to
up

SW3(config-if)#ip address 192.168.1.38 255.255.255.252
SW3(config-if)#
```

```
SW3(config)#ip route 0.0.0.0 0.0.0.0 192.168.1.37
SW3(config)#do sh ip route
Codes: C - connected, S - static, I - IGRP, R - RIP, M - mobile, B - BGP
       D - EIGRP, EX - EIGRP external, O - OSPF, IA - OSPF inter area
       N1 - OSPF NSSA external type 1, N2 - OSPF NSSA external type 2
       E1 - OSPF external type 1, E2 - OSPF external type 2, E - EGP
       i - IS-IS, L1 - IS-IS level-1, L2 - IS-IS level-2, ia - IS-IS inter area
       * - candidate default, U - per-user static route, o - ODR
       P - periodic downloaded static route

Gateway of last resort is 192.168.1.37 to network 0.0.0.0

     192.168.1.0/24 is variably subnetted, 2 subnets, 2 masks
C       192.168.1.8/29 is directly connected, FastEthernet0/1
C       192.168.1.36/30 is directly connected, GigabitEthernet0/1
S*   0.0.0.0/0 [1/0] via 192.168.1.37
```

```
SW3(config)#do sh vlan br

VLAN Name                             Status    Ports
---- -------------------------------- --------- -------------------------------
1    default                          active    Fa0/5, Fa0/6, Fa0/7, Fa0/8
                                                Fa0/9, Fa0/10, Fa0/11, Fa0/12
                                                Fa0/13, Fa0/14, Fa0/15, Fa0/16
                                                Fa0/17, Fa0/18, Fa0/19, Fa0/20
                                                Fa0/21, Fa0/22, Fa0/23, Fa0/24
                                                Gig0/2
10   VLAN0010                         active
20   VLAN0020                         active    Fa0/1, Fa0/2
30   VLAN0030                         active    Fa0/3, Fa0/4
40   VLAN0040                         active
1002 fddi-default                     active
1003 token-ring-default               active
1004 fddinet-default                  active
1005 trnet-default                    active
SW3(config)#int vlan 20
SW3(config-if)#
%LINK-5-CHANGED: Interface Vlan20, changed state to up

%LINEPROTO-5-UPDOWN: Line protocol on Interface Vlan20, changed state to up

SW3(config-if)#ip address 192.168.1.14 255.255.255.248
SW3(config-if)#int vlan 30
SW3(config-if)#
%LINK-5-CHANGED: Interface Vlan30, changed state to up

%LINEPROTO-5-UPDOWN: Line protocol on Interface Vlan30, changed state to up

SW3(config-if)#ip address 192.168.1.22 255.255.255.248
SW3(config-if)#
```

Tip – Simulation mode is your real saviour.

!! Problem again – I was observing a 50% loss doing Inter-VLAN routing between VLAN 20 and 30

The main cause –

```
SW3(config)#
SW3(config)#do sh ip route
Codes: C - connected, S - static, I - IGRP, R - RIP, M - mobile, B - BGP
       D - EIGRP, EX - EIGRP external, O - OSPF, IA - OSPF inter area
       N1 - OSPF NSSA external type 1, N2 - OSPF NSSA external type 2
       E1 - OSPF external type 1, E2 - OSPF external type 2, E - EGP
       i - IS-IS, L1 - IS-IS level-1, L2 - IS-IS level-2, ia - IS-IS inter area
       * - candidate default, U - per-user static route, o - ODR
       P - periodic downloaded static route

Gateway of last resort is 192.168.1.37 to network 0.0.0.0

     192.168.1.0/24 is variably subnetted, 3 subnets, 2 masks
C       192.168.1.8/29 is directly connected, FastEthernet0/1
                       is directly connected, Vlan20
C       192.168.1.16/29 is directly connected, Vlan30
C       192.168.1.36/30 is directly connected, GigabitEthernet0/1
S*   0.0.0.0/0 [1/0] via 192.168.1.37
```

SW3 is confused with 192.168.1.8/29

I solved the issue:

```
SW3(config-if)#shutdown

SW3(config-if)#
%LINK-5-CHANGED: Interface FastEthernet0/1, changed state to administratively down

%LINEPROTO-5-UPDOWN: Line protocol on Interface FastEthernet0/1, changed state to
down

SW3(config-if)#no shutdown

SW3(config-if)#
%LINK-5-CHANGED: Interface FastEthernet0/1, changed state to up

%LINEPROTO-5-UPDOWN: Line protocol on Interface FastEthernet0/1, changed state to up

SW3(config-if)#do sh ip route
Codes: C - connected, S - static, I - IGRP, R - RIP, M - mobile, B - BGP
       D - EIGRP, EX - EIGRP external, O - OSPF, IA - OSPF inter area
       N1 - OSPF NSSA external type 1, N2 - OSPF NSSA external type 2
       E1 - OSPF external type 1, E2 - OSPF external type 2, E - EGP
       i - IS-IS, L1 - IS-IS level-1, L2 - IS-IS level-2, ia - IS-IS inter area
       * - candidate default, U - per-user static route, o - ODR
       P - periodic downloaded static route

Gateway of last resort is 192.168.1.37 to network 0.0.0.0

     192.168.1.0/24 is variably subnetted, 3 subnets, 2 masks
C       192.168.1.8/29 is directly connected, Vlan20
C       192.168.1.16/29 is directly connected, Vlan30
C       192.168.1.36/30 is directly connected, GigabitEthernet0/1
S*   0.0.0.0/0 [1/0] via 192.168.1.37
```

Now, there is 0% loss.

The cause for error –

The switch had two equal Layer 3 paths to the same subnet (Fa0/1 and Vlan20), it would load-balance traffic between them.

Half the packets went via the correct SVI (worked), and half via the wrong interface (dropped) => 50% packet loss.

8. Final successful network topology:

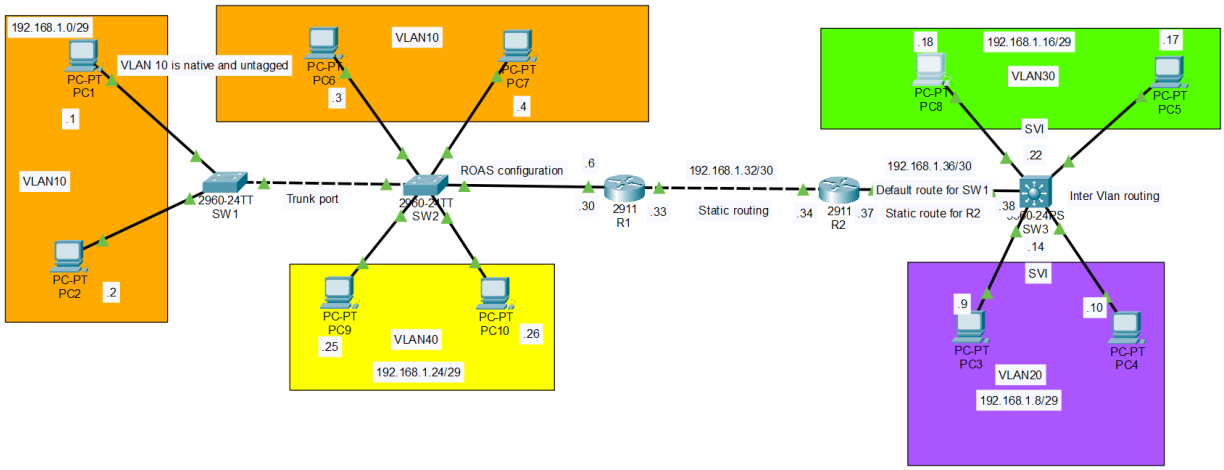

9. PC1 Command Prompt: (VLANs can ping between each other)

```
C:\>ping 192.168.1.4

Pinging 192.168.1.4 with 32 bytes of data:

Reply from 192.168.1.4: bytes=32 time<1ms TTL=128
Reply from 192.168.1.4: bytes=32 time<1ms TTL=128
Reply from 192.168.1.4: bytes=32 time<1ms TTL=128
Reply from 192.168.1.4: bytes=32 time=1ms TTL=128

Ping statistics for 192.168.1.4:
    Packets: Sent = 4, Received = 4, Lost = 0 (0% loss),
Approximate round trip times in milli-seconds:
    Minimum = 0ms, Maximum = 1ms, Average = 0ms

C:\>ping 192.168.1.26

Pinging 192.168.1.26 with 32 bytes of data:

Reply from 192.168.1.26: bytes=32 time<1ms TTL=127
Reply from 192.168.1.26: bytes=32 time=1ms TTL=127
Reply from 192.168.1.26: bytes=32 time<1ms TTL=127
Reply from 192.168.1.26: bytes=32 time<1ms TTL=127

Ping statistics for 192.168.1.26:
    Packets: Sent = 4, Received = 4, Lost = 0 (0% loss),
Approximate round trip times in milli-seconds:
    Minimum = 0ms, Maximum = 1ms, Average = 0ms

C:\>ping 192.168.1.17

Pinging 192.168.1.17 with 32 bytes of data:

Reply from 192.168.1.17: bytes=32 time<1ms TTL=125
Reply from 192.168.1.17: bytes=32 time=10ms TTL=125
Reply from 192.168.1.17: bytes=32 time=1ms TTL=125
Reply from 192.168.1.17: bytes=32 time=1ms TTL=125

Ping statistics for 192.168.1.17:
    Packets: Sent = 4, Received = 4, Lost = 0 (0% loss),
Approximate round trip times in milli-seconds:
    Minimum = 0ms, Maximum = 10ms, Average = 3ms

C:\>ping 192.168.1.10

Pinging 192.168.1.10 with 32 bytes of data:

Reply from 192.168.1.10: bytes=32 time<1ms TTL=125
Reply from 192.168.1.10: bytes=32 time=1ms TTL=125
Reply from 192.168.1.10: bytes=32 time=16ms TTL=125
Reply from 192.168.1.10: bytes=32 time=1ms TTL=125

Ping statistics for 192.168.1.10:
    Packets: Sent = 4, Received = 4, Lost = 0 (0% loss),
Approximate round trip times in milli-seconds:
    Minimum = 0ms, Maximum = 16ms, Average = 4ms
```